CONCRETE CANVAS®

Concrete Impregnated Fabric

1604.EN.CP

MADE IN UK

CONCRETECANVAS

PETROCHEM CASE STUDIES

RAIL ROAD MINING PETROCHEM AGRO UTILITIES MUNICIPAL DEFENCE DESIGN

2014 Fast Track 100 16th fastest growing company in the UK.

2014 Queen's Award for Enterprise in Innovation

2013 Macrobert Award Finalist

2013 Innovation Award Winner Railtex Exhibition

2012 R&D 100 Award winner R&D Magazine

2011 Expert's Choice Winner Most Innovative Product

2011 Brit Insurance Designs of the Year Nominee

2009 Winner Material Connexion Medium Award Material of the Year

2007 Winner D&AD Yellow Pencil Award Product Design

www.concretecanvas.com

CONCRETE CANVAS

PETROCHEM

Concrete Canvas® is a Geosynthetic Cementitious Composite Mat (GCCM), part of a revolutionary new class of construction materials. It is a flexible, concrete impregnated fabric that hardens on hydration to form a thin, durable, water proof and fire resistant concrete layer. Essentially, it's concrete on a roll. Concrete Canvas® GCCM (CC) is predominantly used for erosion control applications such as bund lining, ditch lining, slope protection and the lining of tertiary containment lagoons.

Concrete Canvas® User Benefits

Rapid Install

CC can be laid at a rate of 200sqm/hour, up to 10 times faster than conventional concrete solutions. CC has a working time of 2 hours after hydration and can be installed in wet weather conditions, reducing programme disruption.

Easy To Use

CC is available in man portable rolls for applications with limited access. The concrete is pre-mixed so there is no need for mixing, measuring or compacting. Just add water.

Low Project Cost

The speed and ease of installation mean CC is more cost-effective than conventional concrete, with less logistical complexity.

Eco-Friendly

CC is a low mass, low carbon technology which uses up to 95% less material than conventional concrete for many applications. Up to 200sqm can be delivered on a single pallet; enough to replace two full mixer trucks.

Concrete Canvas® Key Properties

Erosion Protection

CC prevents surface erosion from weathering and has twice the abrasion resistance of OPC.

Conforms To Profile

CC has excellent drape characteristics, allowing the material to conform to the organic profile of the substrate making it more homogeneous with the surrounding environment.

Plant Not Required

CC can be supplied in man portable rolls eliminating the need for plant on site and allowing for installation in areas with restricted access. Prior to hydration, CC layers can be cut to length using basic hand tools, eliminating wastage.

Reduced Maintenance

CC acts as an effective weed inhibitor, preventing costly maintenance required for unlined ditches.

Ageing

Moss can grow on the fibrous top surface of CC resulting in it 'greening over', helping the CC to blend in with its surroundings. CC has a minimum design life of 50 years when installed correctly.

The following pages contain a collection of case studies highlighting the advantages of using CC for a variety of applications in the petrochemical sector.

© Concrete Canvas Ltd. 2015
+44 (0) 345 680 1908 info@concretecanvas.com www.concretecanvas.com
The information contained herein is offered free of charge and is, to the best of our knowledge, accurate. However, since the circumstances and conditions in which such information and the products discussed therein can be used may vary and are beyond our control, we make no warranty, express or implied, of merchantability, fitness or otherwise, or against patent infringement, and we accept no liability, with respect to or arising from use of such information or any such product. Patent and Trademark information can be found here: http://www.concretecanvas.com/patent-and-trademark-info/

CONCRETE CANVAS

BUND LINING

Project Info

- 15 / 11 / 2012
- CC5™ bulk rolls
- 25,500sqm
- Transverse Layers
- Undisclosed, UK
- Undisclosed
- Trant Construction Ltd.
- CC installed as protective liner to clay bunds to provide erosion protection, weed suppression and protect against animal damage.

Rapid Installation

The finished project

In 2012, Concrete Canvas® GCCM* (CC) was specified to line refurbished secondary containment bunds at a Marine Terminal Facility in the UK. The bunds surrounded a series of tank farms storing hydrocarbons as part of the larger onshore facility. CC provides hard armour weathering protection of bunds, acts as an effective weed suppressant, protects against animal damage and provides additional levels of containment and fire protection. Trant Construction Ltd were the contractor on these works which started refurbishment of the bunds in October 2012 with a scheduled completion date of July 2013. The proximity of sensitive infrastructure meant that shotcreting or spray applied protective finishes were not a feasible option at this site.

The 25,500sqm of CC was supplied in called off staggered deliveries to minimise on-site storage of material and to provide flexibility to the programme of works according to the weather conditions. Following refurbishment of the clay bunds, bulk rolls of 200sqm of CC5™ were dispensed onto the bunds from a chain hoisted spreader beam mounted from a 13T tracked excavator. Each CC5™ bulk roll was positioned at the crest of the bund, before unrolling the required length down the inside. The bulk roll was then unrolled down the outside edge before being cut to length using utility knives.

Subsequent layers of CC were positioned to overlap the previous by 100mm. Once each section of bund had been lined, the CC was hydrated using a fire hose from the nearby water mains. Following hydration, the overlapped edge was then folded back on itself by approximately 50mm to apply CT1 sealant in a continuous 5mm bead along the length using a 600ml applicator sealant gun. The CC edge was then folded back and screwed in position using 30mm screws applied with an auto-fed collated screw driver. The sealant created an impermeable joint whilst the screws provided the mechanical bond between overlapped CC layers. Each layer was anchor trenched at both inside and outside edges of the bund. At approximately 24 hours from the point of hydration, the CC had set to 80% strength and was able to be trafficked as works continued on installing kerb work and drainage details on the inside of the bund.

*Geosynthetic Cementitious Composite Mat

CONCRETE CANVAS®
+44 (0) 345 680 1908
info@concretecanvas.com
www.concretecanvas.com

© Concrete Canvas Ltd. 2015

The information contained herein is offered free of charge and is, to the best of our knowledge, accurate. However, since the circumstances and conditions in which such information and the products discussed therein can be used may vary and are beyond our control, we make no warranty, express or implied, of merchantability, fitness or otherwise, or against patent infringement, and we accept no liability, with respect to or arising from use of such information or any such product. Patent and Trademark information can be found here: http://www.concretecanvas.com/patent-and-trademark-info/

CONCRETE CANVAS

BUND LINING

Prepare / grade clay bund to desired profile and height

Transverse layup of bulk roll CC5™ from spreader beam

Hydration of CC from on site mains water supply

Adhesive sealing of 100mm overlapped joints using CT1

Joining of adjacent layers using 30mm autofed screws

Completed section

CONCRETE CANVAS®

+44 (0) 345 680 1908 info@concretecanvas.com www.concretecanvas.com

© Concrete Canvas Ltd. 2015

The information contained herein is offered free of charge and is, to the best of our knowledge, accurate. However, since the circumstances and conditions in which such information and the products discussed therein can be used may vary and are beyond our control, we make no warranty, express or implied, of merchantability, fitness or otherwise, or against patent infringement, and we accept no liability, with respect to or arising from use of such information or any such product. Patent and Trademark information can be found here: http://www.concretecanvas.com/patent-and-trademark-info/

CC was installed at rates of 800sqm per day using a 6 man crew. When the weather was such that refurbishment work on the bunds wasn't possible, the contractors switched to lining the already refurbished sections with CC, meaning that there was a minimum delay in works due to poor weather conditions. CC was able to conform to 90° turns, pipe protrusions through the bunds and terminations at buttress walls. Over 25,000sqm of CC was delivered on only 125 pallets in 16 deliveries.

Completed junction detail section

Completed corner detail section

Buttress wall fixing

Buttress wall fixing

TERMINATION OF CONCRETE CANVAS
TO CONCRETE HEADWALL / BUTTRESS

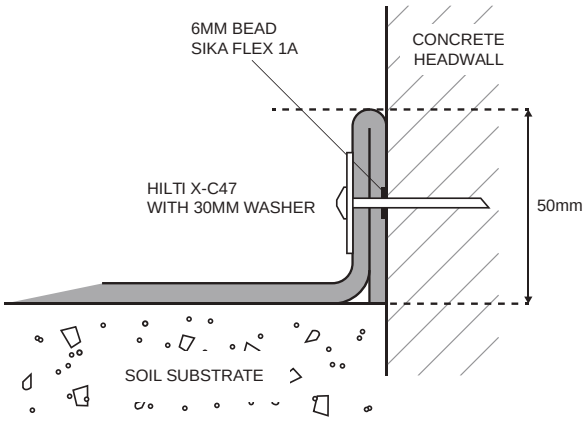

NOT TO SCALE

TERMINATION OF CONCRETE CANVAS
TO POLYMER HEADWALL / BUTTRESS

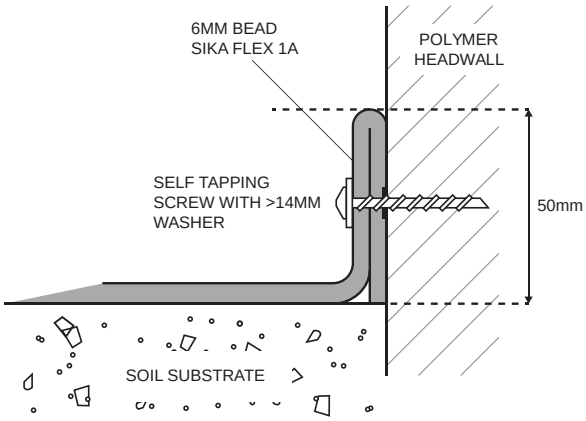

NOT TO SCALE

© Concrete Canvas Ltd. 2015
+44 (0) 345 680 1908 info@concretecanvas.com www.concretecanvas.com
The information contained herein is offered free of charge and is, to the best of our knowledge, accurate. However, since the circumstances and conditions in which such information and the products discussed therein can be used may vary and are beyond our control, we make no warranty, express or implied, of merchantability, fitness or otherwise, or against patent infringement, and we accept no liability, with respect to or arising from use of such information or any such product. Patent and Trademark information can be found here: http://www.concretecanvas.com/patent-and-trademark-info/

Summary

Completed section

Completed section

CONCRETE CANVAS®

+44 (0) 345 680 1908 info@concretecanvas.com www.concretecanvas.com

© Concrete Canvas Ltd. 2015

The information contained herein is offered free of charge and is, to the best of our knowledge, accurate. However, since the circumstances and conditions in which such information and the products discussed therein can be used may vary and are beyond our control, we make no warranty, express or implied, of merchantability, fitness or otherwise, or against patent infringement, and we accept no liability, with respect to or arising from use of such information or any such product. Patent and Trademark information can be found here: http://www.concretecanvas.com/patent-and-trademark-info/

CONCRETE CANVAS

SLOPE PROTECTION

Project Info

29 / 12 / 2014

CC8™ Bulk Roll

3550sqm

Vertical layers

Undisclosed Tank Farm, Oman

Undisclosed

CC8™ was used to prevent the weathering of a roadside slope which was leading to rockfall onto the road.

TAFFYS
MAKING IT HAPPEN

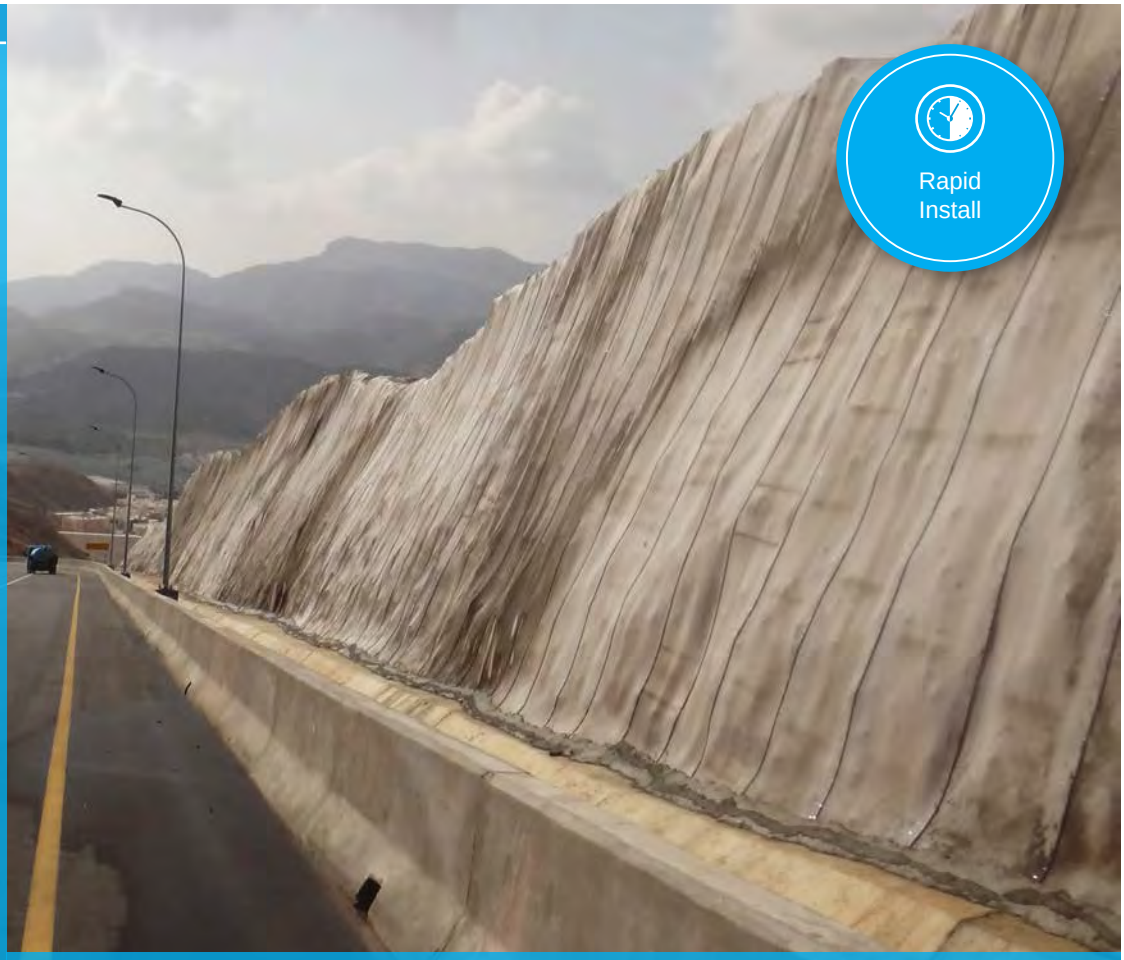

Completed installation

In December 2014, Concrete Canvas® GCCM* (CC) was used to protect a roadside slope (leading to a petrochemical facility) that was suffering from weathering erosion, resulting in rockfall onto the road. CC was installed as a trial, with shotcrete being installed simultaneously on a different part of the slope, to see which was the better method for this application and the environmental conditions.

Loose rock was removed from the face of the slope to ensure intimate contact between it and the CC. Bulk rolls of 8mm thick CC (CC8™) were delivered to site and mounted onto a spreader beam which was then hung from a crane. The rolls were lifted to the top of the slope and the leading edge was placed in an anchor trench and pegged with 380mm stainless steal pegs. The rest of the CC was then unrolled down the entire height of the slope and cut to length, avoiding wastage. This process was repeated with each layer overlapping the previous by 100mm. The overlaps were sealed with CT1 sealant and screwed at 100mm centres in 2 offset rows. Pegs were also inserted where needed down the face. These extra precautions were taken due to periodic high flow rates over the face of the slope. At the base, a mortar was used to seal the CC to the concrete substrate and to the pipes installed to allows the egress of water, preventing the build up of hydrostatic pressure behind the CC. Hydration was achieved using a 200 gallon small tanker at the crest of the slope and a bowser at the base. Due to the high temperatures a second hydration was undertaken an hour later.

The CC was over twice as fast to install as the shotcrete alternative, taking just 5 days instead of the shotcrete's 12, and also resulted in cost savings. Additionally, the **shotcrete required the entire road to be closed for the duration of the works, whereas with CC the road remained open**. Furthermore the shotcrete is already showing signs of failure with noticeable cracking occurring. **The success of this installation has resulted in client initiating investigations into more potential projects for which CC could be used.**

*Geosynthetic Cementitious Composite Mat

CONCRETE CANVAS®
+44 (0) 345 680 1908
info@concretecanvas.com
www.concretecanvas.com

© Concrete Canvas Ltd. 2015
The information contained herein is offered free of charge and is, to the best of our knowledge, accurate. However, since the circumstances and conditions in which such information and the products discussed therein can be used may vary and are beyond our control, we make no warranty, express or implied, of merchantability, fitness or otherwise, or against patent infringement, and we accept no liability, with respect to or arising from use of such information or any such product. Patent and Trademark information can be found here: http://www.concretecanvas.com/patent-and-trademark-info/

CONCRETE CANVAS

SLOPE PROTECTION

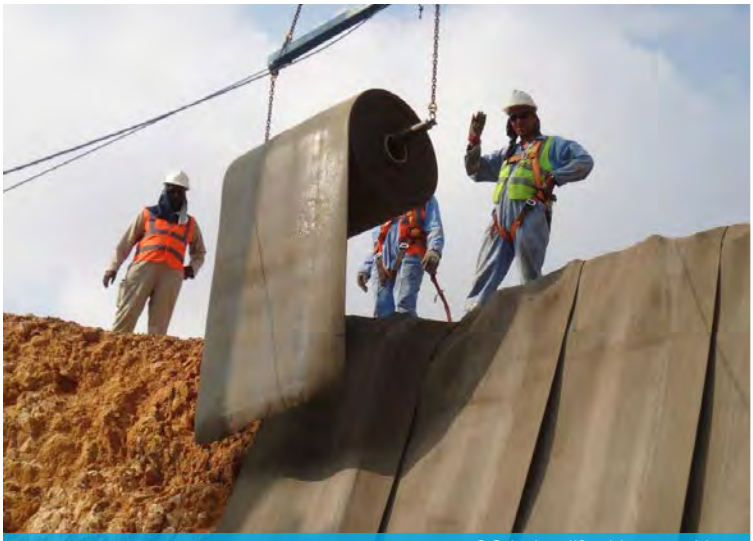

CC being lifted into position

CC jointed with two offset rows of screws

Hydration

Anchor trench at the crest of the slope

The finished project

CONCRETE CANVAS®

+44 (0) 345 680 1908 info@concretecanvas.com www.concretecanvas.com

© Concrete Canvas Ltd. 2015

The information contained herein is offered free of charge and is, to the best of our knowledge, accurate. However, since the circumstances and conditions in which such information and the products discussed therein can be used may vary and are beyond our control, we make no warranty, express or implied, of merchantability, fitness or otherwise, or against patent infringement, and we accept no liability, with respect to or arising from use of such information or any such product. Patent and Trademark information can be found here: http://www.concretecanvas.com/patent-and-trademark-info/

CONCRETE CANVAS

DITCH LINING

Project Info

08 / 07 / 2014

CC8™ Bulk Rolls

1000sqm

Transverse Layers

Chayvo OPF Onshore Processing Facility, Sakhalin, Russia

VECO a CH2M Hill Company

Lining drainage channels in front of PLF (Production Living Facility) Building to avoid erosion and undermining of the building and road.

Completed section ditch lined with CC8™

In July 2014 Concrete Canvas® GCCM* was used to line a drainage ditch at the Chayvo OPF Onshore Processing Facility, Sakhalin, Russia. The ditch was located in front of a PLF (Production Living Facility), and there was a risk of erosion undermining the PLF and the nearby road. Due to the weather conditions in Sakhalin, there are only a few months a year where construction work like this can feasibly take place, so installation speed was of the essence. The project was installed by VECO a CH2M Hill Company for ENL Exxon Neftegas Limited. Concrete Canvas® GCCM (CC) was chosen due to the limited resources available on site and in the surrounding area, limited accessibility and cost effectiveness compared to conventional concreting methods.

The ditch was re-graded using an excavator, vegetation removed and an anchor trench cut on either shoulder. A transverse layup was chosen due to the varying profile of the ditch. A Zoom Boom and spreader bar combination was used to lift 8mm thick CC (CC8™) bulk rolls and manoeuvre them into position, either to be unrolled from the crest of the ditch or so they could be unrolled on the flat. The CC8™ was then cut to specific profile lengths using a utility knife, eliminating any wastage. The installation team ensured there was a 100mm overlap in the direction of water flow between the layers of CC8™ before fixing it to the substrate with 375mm J-pegs. The overlaps were then sealed with Dow Corning 762 sealant and screwed at 200mm centres with 30mm coated screws, before being hydrated with a pressure hose and 7000 litre bowser.

The installation of CC was considered a huge success, as alternatives such as **poured concrete are difficult to obtain there, and can cost up to $2,750 (USD) per cubic metre**. The extreme climate in Chayvo, where the camp can be under 4m of snow for 8 Months of the Year, experiencing temperatures as low as -40 degrees Celcius meant that CC would be an enabling technology for ENL, allowing complete infrastructure projects to be completed in a single Season.

*Geosynthetic Cementitious Composite Mat

CONCRETE CANVAS®
+44 (0) 345 680 1908
info@concretecanvas.com
www.concretecanvas.com

© Concrete Canvas Ltd. 2015
The information contained herein is offered free of charge and is, to the best of our knowledge, accurate. However, since the circumstances and conditions in which such information and the products discussed therein can be used may vary and are beyond our control, we make no warranty, express or implied, of merchantability, fitness or otherwise, or against patent infringement, and we accept no liability, with respect to or arising from use of such information or any such product. Patent and Trademark information can be found here: http://www.concretecanvas.com/patent-and-trademark-info/

CONCRETE CANVAS

DITCH LINING

The ditch was excavated and graded to profile

CC8™ bulk rolls were unrolled across the ditch and into anchor trenches

Unset CC8™ cut to length, avoiding wastage

CC8™ sealed, screwed and fixed to the substrate with ground pegs

Hydration with a pressure hose from a 7000 litre bowser

The finished project

CONCRETE CANVAS®
+44 (0) 345 680 1908
info@concretecanvas.com
www.concretecanvas.com

© Concrete Canvas Ltd. 2015

The information contained herein is offered free of charge and is, to the best of our knowledge, accurate. However, since the circumstances and conditions in which such information and the products discussed therein can be used may vary and are beyond our control, we make no warranty, express or implied, of merchantability, fitness or otherwise, or against patent infringement, and we accept no liability, with respect to or arising from use of such information or any such product. Patent and Trademark information can be found here: http://www.concretecanvas.com/patent-and-trademark-info/

CONCRETE CANVAS

SLOPE PROTECTION

Project Info

- 12 / 05 / 2014
- CC8™ Bulk Rolls
- 2000sqm
- Vertical layers
- South Iraq
- Fiafi Group
- CC8™ used to prevent rain eroding a slope and causing a slip

Completed section of slope

In May 2014, Concrete Canvas® GCCM* was used to provide erosion control to a supporting embankment of a bridge at a water injection oil and gas site, south Iraq. The erosion was the result of environmental weathering, predominantly rainfall, causing surface slip which threatened to destabilise the bank. A low cost and rapid solution was required; a concrete slab was considered but it would have been more expensive and time consuming.

Installation was carried out by Fiafi Group. Prior to the installation of 8mm Concrete Canvas® GCCM (CC8™), loose rock was removed and the surface was levelled using a granular type 1a sub base, that was compacted and watered. Bulk rolls of CC8™ were delivered to site and lifted using a mechanical digger, before the CC8™ was unrolled and cut to length using a utility knife. A drainage ditch was created at the toe of the slope, before the lengths of CC8™ were positioned at the crest by the installation team and unrolled down its length. Each layer was overlapped by 100mm and all layers overlapped the crest of the drainage ditch. The CC8™ was pegged down and fixed to the existing masonry wall using masonry screws, before it was hydrated along the overlap, sealed with CT1 sealant and screwed at 50mm intervals. The rest of the CC8™ was then hydrated using a bowser and hose with a sprinkler attached.

2000sqm of CC8™ were installed by 8 people (including supervisors) in just two days, instead of the 7 it would have taken with conventional methods. Furthermore it was installed in 40 degrees Celsius and 95% humidity, so the speed of install reduced the risk of dehydration and sunburn for the labourers. The site was also difficult to access with plant equipment so cutting CC8™ to length and transporting it by hand was logistically much easier.

*Geosynthetic Cementitious Composite Mat

CONCRETE CANVAS®
+44 (0) 345 680 1908 info@concretecanvas.com www.concretecanvas.com

© Concrete Canvas Ltd. 2015
The information contained herein is offered free of charge and is, to the best of our knowledge, accurate. However, since the circumstances and conditions in which such information and the products discussed therein can be used may vary and are beyond our control, we make no warranty, express or implied, of merchantability, fitness or otherwise, or against patent infringement, and we accept no liability, with respect to or arising from use of such information or any such product. Patent and Trademark information can be found here: http://www.concretecanvas.com/patent-and-trademark-info/

CONCRETE CANVAS

SLOPE PROTECTION

Ground preparation

CC8™ lengths unrolled down the slope

Masonry fixings and ground pegs

CT1 sealant being applied

Hydration

The finished slope

CONCRETE CANVAS®
© Concrete Canvas Ltd. 2015

+44 (0) 345 680 1908 info@concretecanvas.com www.concretecanvas.com

The information contained herein is offered free of charge and is, to the best of our knowledge, accurate. However, since the circumstances and conditions in which such information and the products discussed therein can be used may vary and are beyond our control, we make no warranty, express or implied, of merchantability, fitness or otherwise, or against patent infringement, and we accept no liability, with respect to or arising from use of such information or any such product. Patent and Trademark information can be found here: http://www.concretecanvas.com/patent-and-trademark-info/

CONCRETE CANVAS

BUND LINING

Project Info

- 27 / 10 / 2014
- CC5™ Bulk Rolls
- 5200sqm
- Transverse layers
- Mount Vernon Washington, USA
- Western Refinery Service (WRS)
- CC5™ was used as a hard armour capping for a secondary containment berm

Rapid Installation

Completed section of bund

In October 2014, Concrete Canvas® GCCM* (CC) was used as a hard armour capping and erosion prevention method at a refinery site in Washington, USA. Industry safety protocols state that berms must maintain a minimum height and erosion leads to time consuming re-profiling and re-coating of the berms to ensure they meet this standard.

Previously, asphalt had been used to protect the berm, however this incurred huge maintenance costs. Not only did the berm need to be re-coated every 5-7 years, but it required regular and costly maintenance throughout the year. CC has a 50 year life-span and requires little to no maintenance, resulting in huge cost savings. Additionally CC offers hydrocarbon resistance to BS:14414; based on a 56 day immersion test, some CC samples were found to actually gain strength upon exposure to hydrocarbons. Furthermore CC's weed suppression characteristics prevent vegetation growth (and therefore the costs associated with vegetation removal) and prevent the fire hazards that result if the vegetation dies off. The concrete layer stops any UV degradation of the PVC backing, unlike asphalt which cracks with long term exposure to UV, compromising the integrity of the bund.

WRS (Western Refinery Services) completed the installation over a period of 7 days with a team of 8. Bulk rolls of CC5™ were placed at the crest of the berm and spooled down one side before being unrolled down the other. This process was repeated along the berm, with a 100mm overlap being created between layers. Each overlap was screwed and sealed using 20mm self tapping screws placed at 300mm intervals and Sika 1-A sealant. On the inside of the bund, the cut edges of the CC were placed into an anchor trench before being captured with concrete paving. On the outer edge of the bund, masonry bolts were used to fix the CC to the existing concrete infrastructure. In areas where the bund had eroded to the extent it no longer met the height requirements, sandbags were used to fill any voids before the CC was deployed. Infrastructure such as pipework was easily accommodated due to the drape characteristics and flexibility of CC. Holes were cut for the pipes, and where needed an extra layer of CC was fitted around them and sealed. The CC was hydrated using a high volume mounted hose attached to a water hydrant.

*Geosynthetic Cementitious Composite Mat

CONCRETE CANVAS®
+44 (0) 345 680 1908
info@concretecanvas.com
www.concretecanvas.com

© Concrete Canvas Ltd. 2015

The information contained herein is offered free of charge and is, to the best of our knowledge, accurate. However, since the circumstances and conditions in which such information and the products discussed therein can be used may vary and are beyond our control, we make no warranty, express or implied, of merchantability, fitness or otherwise, or against patent infringement, and we accept no liability, with respect to or arising from use of such information or any such product. Patent and Trademark information can be found here: http://www.concretecanvas.com/patent-and-trademark-info/

CONCRETE CANVAS

BUND LINING

Cracked asphalt

Unrolling the CC down the bund

Sealing the overlap with CT1 Sika1-A sealant

Hydration from the water mains

Piping detail

The finished project

5200sqm of CC5™ were installed by a team of 8 in just 7 days. The completion of this project has resulted in drastically reduced maintenance costs, improved impermeability and an improved fire resistance of the berm. Infrastructure, corner details and pipe protrusions were simple to accommodate resulting in an easy and rapid install. The client has said they are “very happy” with the outcome of the project and they are looking to install CC on other bunds in their vast oil and gas network.

CONCRETE CANVAS®

+44 (0) 345 680 1908 info@concretecanvas.com www.concretecanvas.com

© Concrete Canvas Ltd. 2015

The information contained herein is offered free of charge and is, to the best of our knowledge, accurate. However, since the circumstances and conditions in which such information and the products discussed therein can be used may vary and are beyond our control, we make no warranty, express or implied, of merchantability, fitness or otherwise, or against patent infringement, and we accept no liability, with respect to or arising from use of such information or any such product. Patent and Trademark information can be found here: http://www.concretecanvas.com/patent-and-trademark-info/

CONCRETE CANVAS

TSEC

REMEDIATION

Project Info

- 11 / 08 / 2014
- CC5™ Bulk Rolls
- 900sqm
- Transverse layers
- PCK refinery, Schwedt, Germany
- Undisclosed
- CC5™ used to improve the impermeability of an extinguishing basin.

PCK

Completed installation

In August 2014, Concrete Canvas® GCCM* (CC) was used to line an extinguishing lake to improve impermeability. The original poured concrete structure had cracked and spalled, resulting in excessive water loss. Removing the incumbent basin and re-building it using poured concrete and form work was considered, however this would have been more time consuming and taken the basin out of operation for an extended period of time during construction.

Installation was carried out by an approved contractor (with no prior experience of installing CC) for PCK; a joint venture between BP, Rosneft, Shell, Eni and Total. The failing concrete was cleaned and mortar applied to any larger cracks so as to eliminate voids under the CC. An anchor trench was created on the shoulder of the basin so as to prevent water ingress underneath the CC and provide a neat termination to the cut edges. Bulk rolls of 5mm thick CC (CC5™) were delivered to site before being mounted onto a spreader beam hung from a Zoom Boom. The project was completed in sections with the two shorter sides being completed first. For these sections the CC was unrolled on the flat, batched to specific profile length and positioned into the basin by hand with alternating perpendicular overlaps created at the corners. This allowed for the CC to be unrolled across the width of the basin for the remaining two sections, starting at each end and progressing towards the middle where a drainage sump is located. Each section of CC was jointed and hydrated via the same procedure: the leading edge of the CC was fixed to the concrete substrate using 40mm wedge anchors at 2m intervals, the subsequent layer was positioned to overlap the previous by 100mm, then the construction team hydrated under the overlap and applied certificated sealing material. Hydration was achieved via an extinguishing hose connected to the main ring system on site.

900sqm of CC5™ were installed by 5 people in 4 days with some inclement weather. The client was very impressed with the result and subsequently instigated a bund lining trial as well as planning to line a 6000sqm extinguishing basin with CC. **A poured concrete solution would have taken at least one month to complete, meaning a time saving of over 75%.** Additionally CC needed far less labour and was more cost effective than a poured concrete solution.

*Geosynthetic Cementitious Composite Mat

© Concrete Canvas Ltd. 2015
+44 (0) 345 680 1908 info@concretecanvas.com www.concretecanvas.com
The information contained herein is offered free of charge and is, to the best of our knowledge, accurate. However, since the circumstances and conditions in which such information and the products discussed therein can be used may vary and are beyond our control, we make no warranty, express or implied, of merchantability, fitness or otherwise, or against patent infringement, and we accept no liability, with respect to or arising from use of such information or any such product. Patent and Trademark information can be found here: http://www.concretecanvas.com/patent-and-trademark-info/

CONCRETE CANVAS

TSEC

REMEDIATION

Site before works began

Batching on the flat and a corner detail

Sealing under the overlap

The start of section 3

Hydration

The finished project

CONCRETE CANVAS®

+44 (0) 345 680 1908 info@concretecanvas.com www.concretecanvas.com

© Concrete Canvas Ltd. 2015

The information contained herein is offered free of charge and is, to the best of our knowledge, accurate. However, since the circumstances and conditions in which such information and the products discussed therein can be used may vary and are beyond our control, we make no warranty, express or implied, of merchantability, fitness or otherwise, or against patent infringement, and we accept no liability, with respect to or arising from use of such information or any such product. Patent and Trademark information can be found here: http://www.concretecanvas.com/patent-and-trademark-info/